HA17555 Series

Precision Timer

HITACHI

HA17555 Series are ICs designed for accurate time delays or oscillations. It provides both of trigger terminal and reset terminal in order to enable a wide scope of application including Mono Multi Vibrator and Astable Multi Vibrator, and the number of external components is fewer. Further, it's compatible with NE555 of singnetics.

- Communications industry: HA17555PS, HA17555FP
- General purpose: HA17555, HA17555F

Applications

- Delay Time Generator (Mono Multi Vibrator)
- Pulse Generator (Astable Multi Vibrator)
- Pulse Width Modulator
- Pulse Location Modulator
- Miss Pulse Detector

Features

- Mono multi vibrator can be constructed with one resistor and one capacitor.
- Astable multi vibrator can be constructed with two resistors and one capacitor.
- Delay time can be established widely from several μ seconds to several hours.
- Pulse Duty can be controlled.
- The maximum value of both sink current and source current is 200mA.
- Direct connection of output to TTL is possible.
- Temperature/delay time ratio is 50 ppm/°C (typ).
- Output is normally in the on and off states.

Notice: The example of an applied circuit or combination with other equipment shown herein indicates characteristics and performance of a semiconductor -applied products.

The company shall assume no responsibility for any problem involving a patent caused when applying the descriptions in the example.

Pin Arrangement

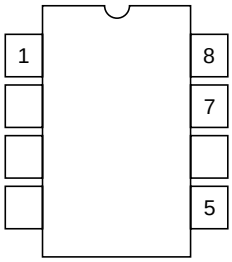

Circuit Schematic

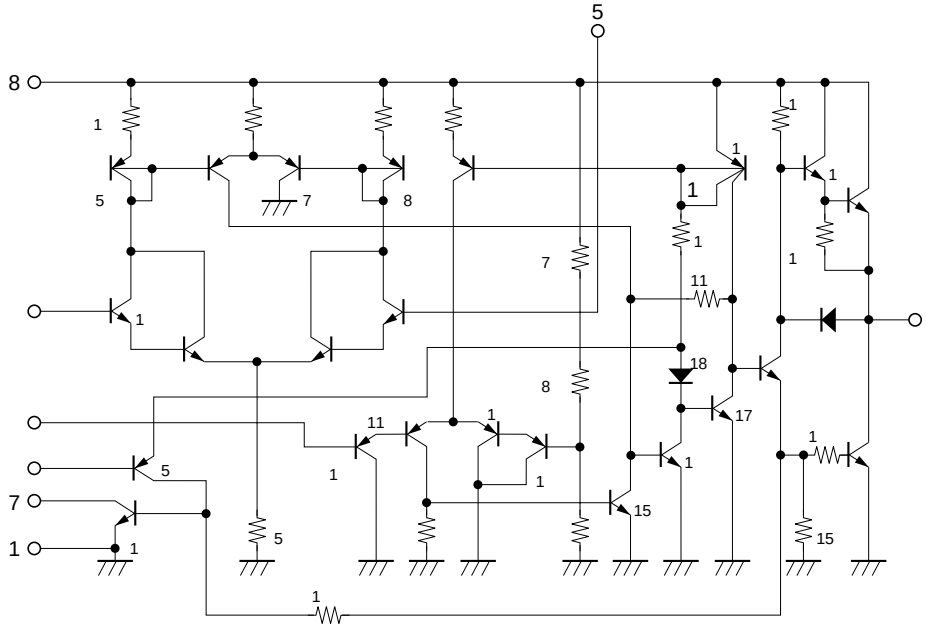

Block Diagram

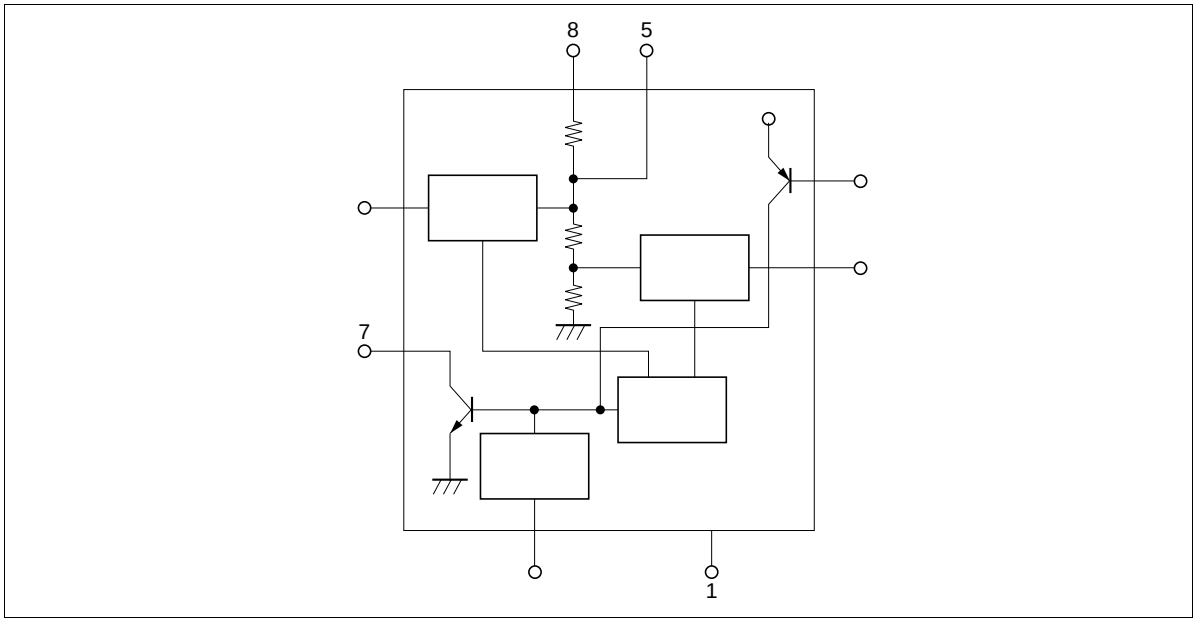

Absolute Maximum Ratings (Ta = 25°C)

Item	Symbol	Rating	Unit
Supply voltage	V_{CC}	18	V
Discharge current	I_7	200	mA
Output source current	Isource	200	mA
Output sink current	Isink	200	mA
Power dissipation	P_T	385*[1]	mW
Operating temperature	Topr	–20 to +75	°C
Storage temperature	Tstg	–55 to +125	°C

Note: 1. Value under the condition of Ta • 25°C. In case of more than it, 3.85 mW/°C derating shall be performed.

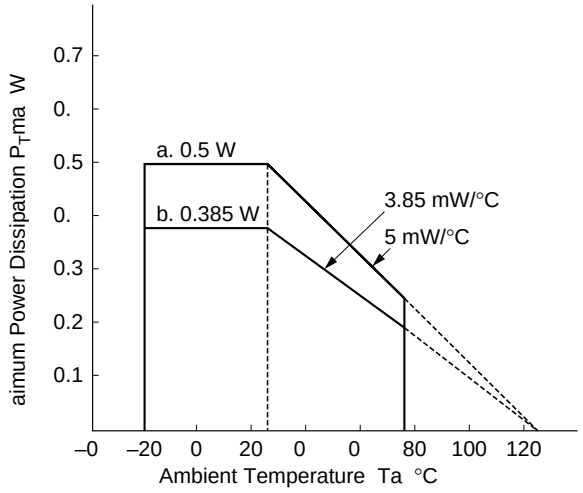

a. ounting on 5 of wiring density glassepoy oard of 50 mm × 50 mm × 1.5 t θ a 200°C/W

b. When not mounted. θ a 20°C/W

Electrical Characteristics (V_{CC} = 5 to 15 V, Ta = 25°C)

Item	Symbol	Min	Typ	Max	Unit	Test conditions
Supply voltage*[1]	V_{CC}	4.5	—	16.0	V	
Supply current	I_{CC}	—	3.0	6.0	mA	V_{CC} = 5 V, R_L = •
	I_{CC}	—	10	15	mA	V_{CC} = 15 V, R_L = •
Timing error*[2] (Inherent error)	Et	—	1.0	—	%	
Timing error*[2] (Ta dependency)	Et	—	50	—	ppm/°C	Ta = –20 to + 75°C
Timing error*[2] (Voltage dependency)	Et	—	0.01	—	%/V	V_{CC} = 5 to 15 V
Threshold voltage	Vth	—	2/3 × V_{CC}	—	V	
Trigger voltage	V_T	—	5.0	—	V	V_{CC} = 15 V
	V_T	—	1.67	—	V	V_{CC} = 5 V
Trigger current	I_T	—	0.5	—	µA	
Reset voltage	V_R	0.2	0.5	1.0	V	
Reset current	I_R	—	0.1	—	mA	
Threshold current	Ith*[3]	—	0.1	0.25	µA	

Electrical Characteristics (V_{CC} = 5 to 15 V, Ta = 25°C) (cont)

Item	Symbol	Min	Typ	Max	Unit	Test conditions
Control voltage	V_{CL}	9	10	11	V	V_{CC} = 15 V
	V_{CL}	2.6	3.33	4.0	V	V_{CC} = 5 V
Output voltage	V_{OL}	—	0.1	0.25	V	V_{CC} = 15 V, Isink = 10 mA
	V_{OL}	—	0.4	0.75	V	V_{CC} = 15 V, Isink = 50 mA
	V_{OL}	—	2.0	2.5	V	V_{CC} = 15 V, Isink = 100 mA
	V_{OL}	—	2.5	—	V	V_{CC} = 15 V, Isink = 200 mA
	V_{OL}	—	0.25	0.35	V	V_{CC} = 5 V, Isink = 5 mA
Output voltage	V_{OH}	—	12.5	—	V	V_{CC} = 15 V, Isource = 200 mA
	V_{OH}	12.75	13.3	—	V	V_{CC} = 15 V, Isource = 100 mA
	V_{OH}	2.75	3.3	—	V	V_{CC} = 5 V, Isource = 100 mA
Output rise time	tr	—	100	—	ns	No loading
Output fall time	tf	—	100	—	ns	No loading
Oscillation pulse width*[4]	tw	10.0	—	—	ns	

Notes: 1. When output is low (When it is high, I_{CC} is lower by 1 mA typically.)
2. R_A, R_B = 1 k to 100 k•, C = 0.1 µF, V_{CC} = 5 V or 15 V.
3. (R_A + R_B) at V_{CC} = 15 V is determined by the value of Ith. It is 20 M• Max.
4. Output pulse width at mono multi circuit. Output high level pulse width at astable circuit.

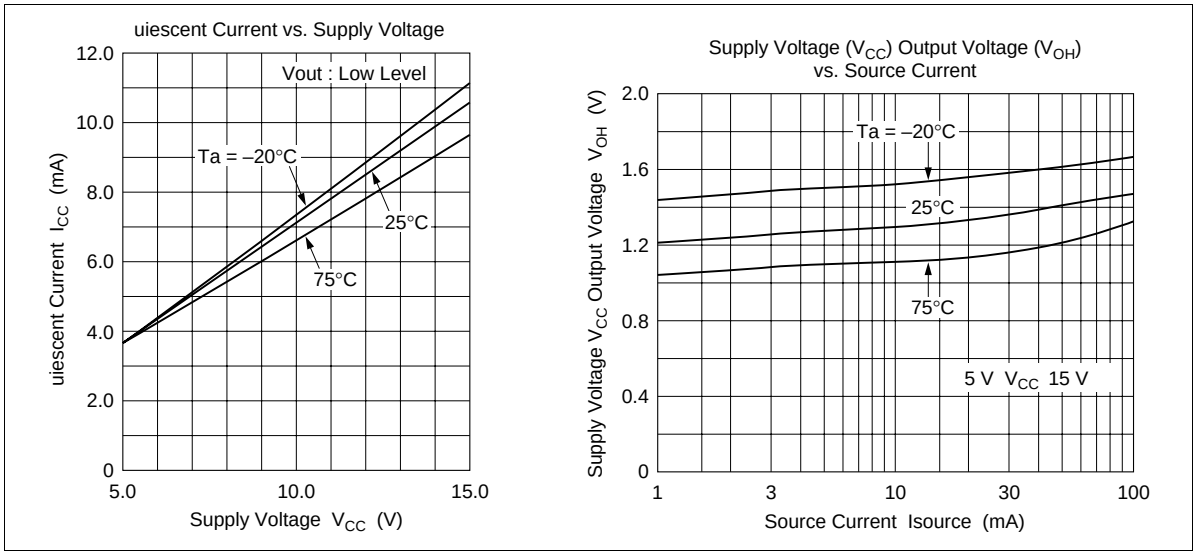

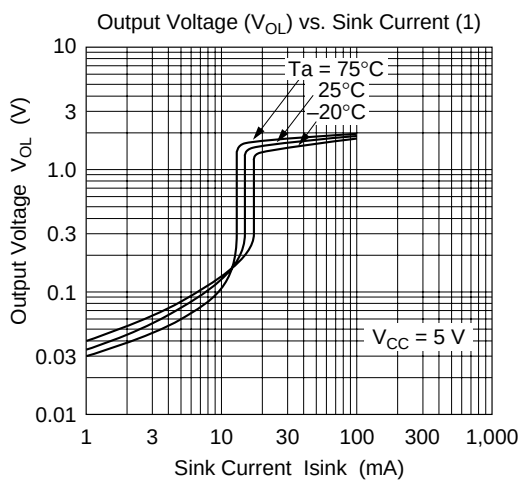
Output Voltage (V_{OL}) vs. Sink Current (1)
Ta = 75°C
25°C
–20°C
V_{CC} = 5 V
Output Voltage V_{OL} (V)
10
3
1.0
0.3
0.1
0.03
0.01
1
3
10
30
100
300
1,000
Sink Current Isink (mA)

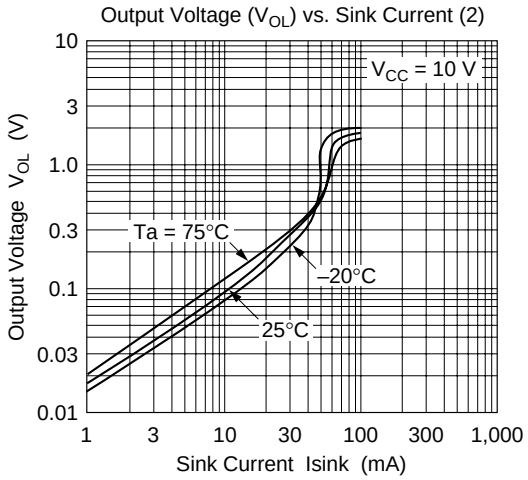
Output Voltage (V_{OL}) vs. Sink Current (2)
V_{CC} = 10 V
Ta = 75°C
–20°C
25°C
Output Voltage V_{OL} (V)
10
3
1.0
0.3
0.1
0.03
0.01
1
3
10
30
100
300
1,000
Sink Current Isink (mA)

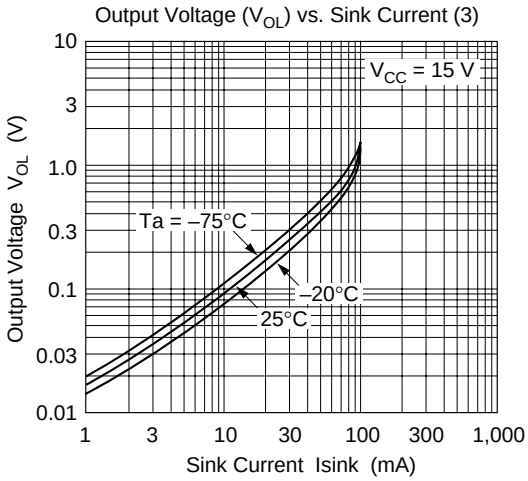
Output Voltage (V_{OL}) vs. Sink Current (3)
V_{CC} = 15 V
Ta = –75°C
–20°C
25°C
Output Voltage V_{OL} (V)
10
3
1.0
0.3
0.1
0.03
0.01
1
3
10
30
100
300
1,000
Sink Current Isink (mA)

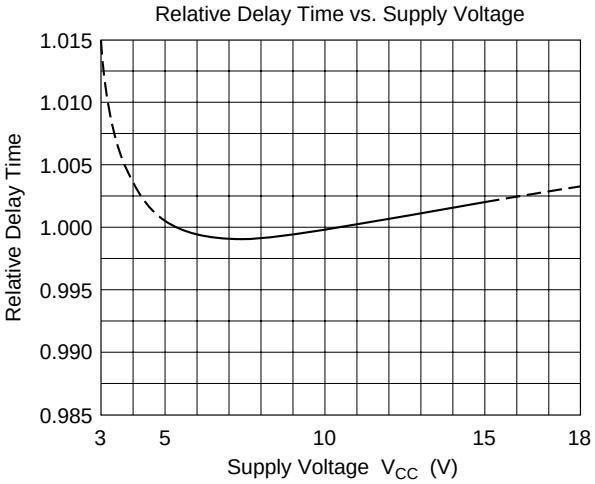
Relative Delay Time vs. Supply Voltage
Relative Delay Time
1.015
1.010
1.005
1.000
0.995
0.990
0.985
3
5
10
15
18
Supply Voltage V_{CC} (V)

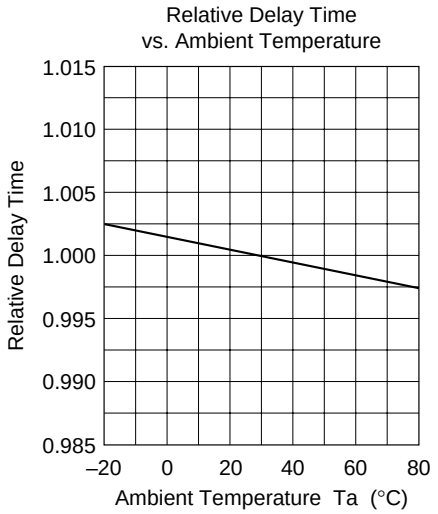
Relative Delay Time
vs. Ambient Temperature
1.015
1.010
1.005
1.000
0.995
0.990
0.985
Relative Delay Time
–20
0
20
40
60
80
Ambient Temperature Ta (°C)

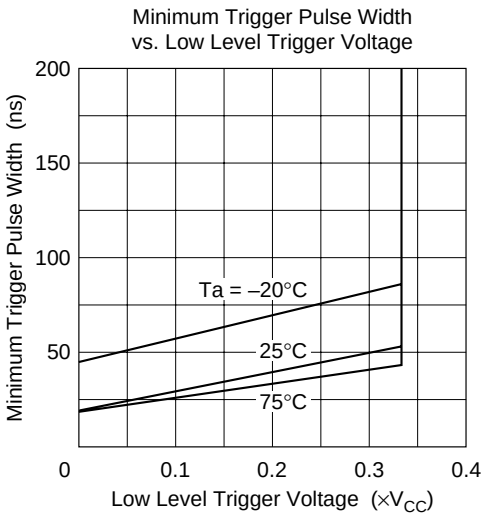
Minimum Trigger Pulse Width
vs. Low Level Trigger Voltage
200
150
100
50
0
Minimum Trigger Pulse Width (ns)
Ta = –20°C
25°C
75°C
0.1
0.2
0.3
0.4
Low Level Trigger Voltage (×VCC)

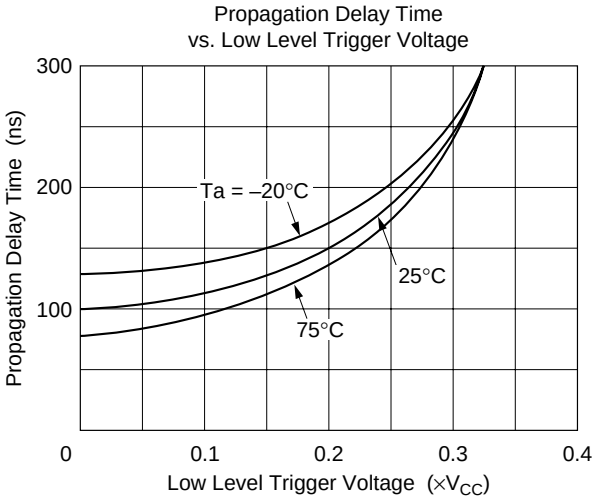
Propagation Delay Time
vs. Low Level Trigger Voltage
300
200
100
0
Propagation Delay Time (ns)
Ta = –20°C
25°C
75°C
0.1
0.2
0.3
0.4
Low Level Trigger Voltage (×VCC)